Novatech®

R-301/401
SLIDING PATIO DOOR
"NON-IMPACT"

L F Schmidt

L. F. SCHMIDT LICENSE No. 43409 STATE OF FLORIDA PROFESSIONAL ENGINEER

Digitally signed by Lyndon F Schmidt
Date: 2023.09.14 09:38:02 -04'00'

This item has been digitally signed and sealed by **L. F. Schmidt, P.E.** on the date adjacent to the seal.

Printed copies of this document are not considered signed and sealed and the signature must be verified on any electronic copies.

THIS PRODUCT APPROVAL IS VALID ONLY FOR THE STATE OF FLORIDA

GENERAL NOTES

1. This product anchoring drawing is in compliance with the 8th Edition (2023) Florida Building Code (FBC) structural requirements excluding the "High Velocity Hurricane Zone" (HVHZ). See the Certification Agency Certificate for sizes, specifcations and ratings.
2. Product anchors shall be as listed and spaced as shown on details. Anchor embedment to base material shall be beyond wall dressing or stucco.
3. When used in areas requiring wind borne debris protection this product is required to be protected with an impact resistant covering that complies with FBC Sections 1609.1.2 & R301.2.1.2.
4. For 2x stud framing construction, anchoring of these units shall be the same as that shown for 2x buck masonry construction.
5. Site conditions that deviate from the details of this drawing require further engineering analysis by a licensed engineer or registered architect.

TABLE OF CONTENTS

SHEET#	DESCRIPTION
1	Typical elevations, design pressures and general notes
2	Horizontal cross sections
3	Vertical cross sections
4	Buck and frame anchoring
5	Bill of materials, glazing details & components

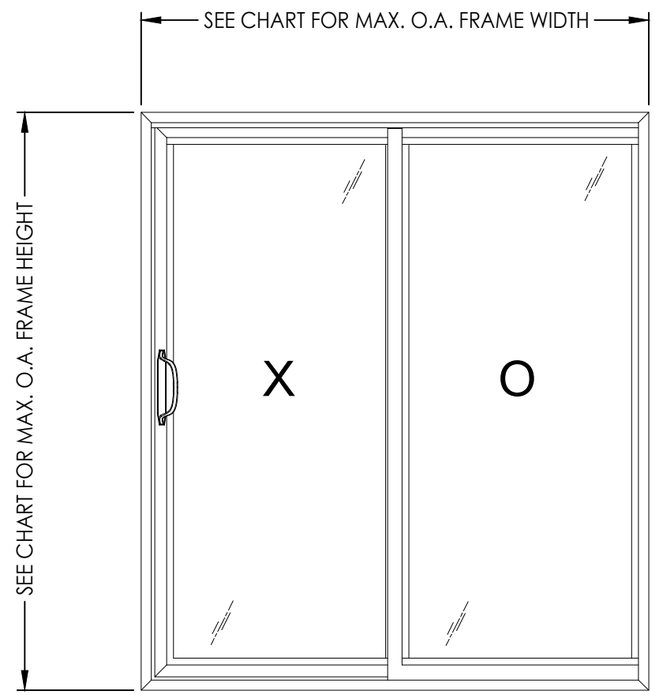

MAX. FRAME DIMENSION	MAX. D.L.O. DIMENSION	GLASS TYPE	DESIGN PRESSURE (PSF)		SILL TOWER RISER
			POSITIVE	NEGATIVE	
72.0" X 82.0"	31.9" x 74.7"	G1	+35.0	-35.0	NO
72.0" X 82.0"	31.9" x 74.7"	G1	+40.0	-60.0	NO
72.0" X 82.0"	31.9" x 74.7"	G1	+55.0	-60.0	YES

Documents Prepared By:
Lyndon F. Schmidt
P.E. No. 43409
RW BUILDING CONSULTANTS, INC.
P.O. Box 230, Valrico, FL 33595
Phone No.: 813.659.9197
FBPE Registry No. 9813

PRODUCT: NOVATECH PATIO DOOR

PART OR ASSEMBLY: TYPICAL ELEVATION, DESIGN PRESSURES & GENERAL NOTES

NO.	DATE	BY
2	9/14/23 UPDATE TO 8TH ED. (2023) FBC	LFS
1	10/01/20 UPDATE TO 7TH ED. (2020) FBC	LFS

REVISIONS

DATE: 7/11/18
SCALE: N.T.S.
DWG. BY: JK
CHK. BY: LFS
DRAWING NO.: FL-27628.5
SHEET 1 OF 5

© 2018 R.W. Building Consultants Inc.

Z:\2023 FBC Drawings\Novatech Patio Doors\FL-27628 R3\FL-27628.5.dwg

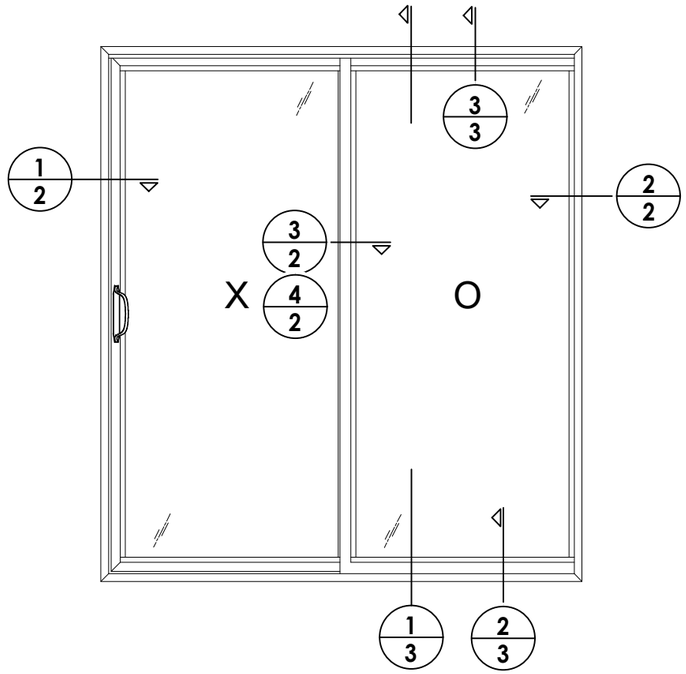

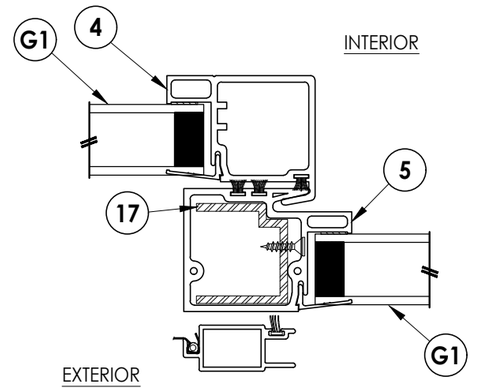

REINFORCEMENT SHOWN IS REQUIRED FOR DESIGN PRESSURES UP TO 35 PSF

4/2 ***HORIZONTAL CROSS SECTION***

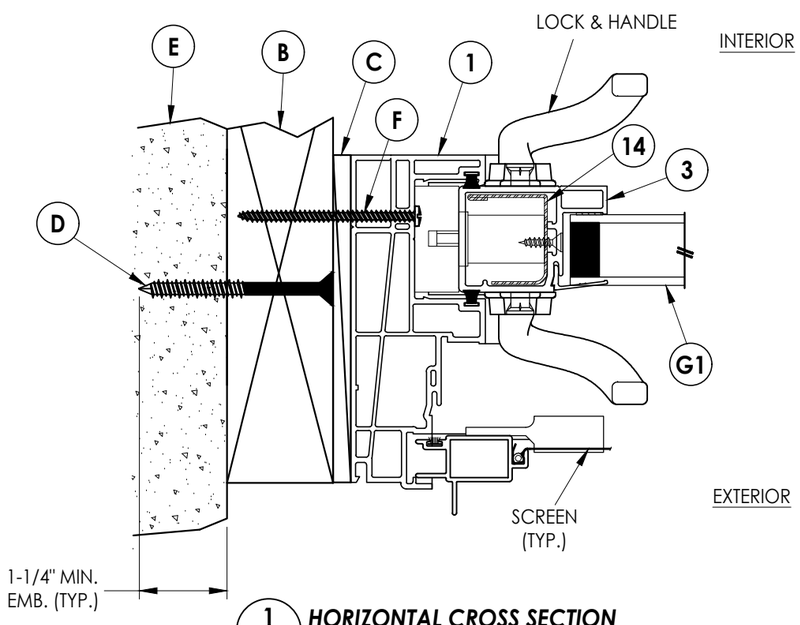

1/2 ***HORIZONTAL CROSS SECTION***
Shown w/ 2X Buck

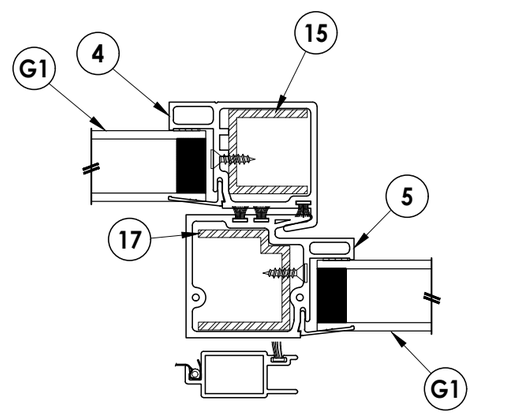

REINFORCEMENT SHOWN IS REQUIRED FOR DESIGN PRESSURES OVER 35 PSF

3/2 ***HORIZONTAL CROSS SECTION***

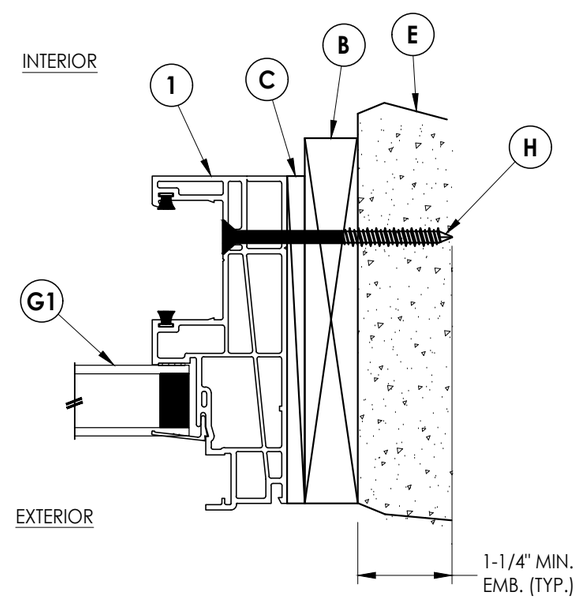

2/2 ***HORIZONTAL CROSS SECTION***
Shown w/ 1X Buck Construction

Documents Prepared By:
Lyndon F. Schmidt
P.E. No. 43409

RW BUILDING CONSULTANTS, INC.
P.O. Box 230, Valrico, FL 33595
Phone No.: 813.659.9197
FBPE Registry No. 9813

PRODUCT: NOVATECH PATIO DOOR

PART OR ASSEMBLY: HORIZONTAL CROSS SECTIONS

REVISIONS

NO.	DATE		BY
2	9/14/23	UPDATE TO 8TH ED. (2023) FBC	LFS
1	10/01/20	UPDATE TO 7TH ED. (2020) FBC	LFS

DATE: 7/11/18
SCALE: N.T.S.
DWG. BY: JK
CHK. BY: LFS
DRAWING NO.: FL-27628.5
SHEET 2 OF 5

© 2018 R.W. BUILDING CONSULTANTS INC.

Z:\2023 FBC Drawings\Novatech Patio Doors\FL-27628 R3\FL-27628.5.dwg

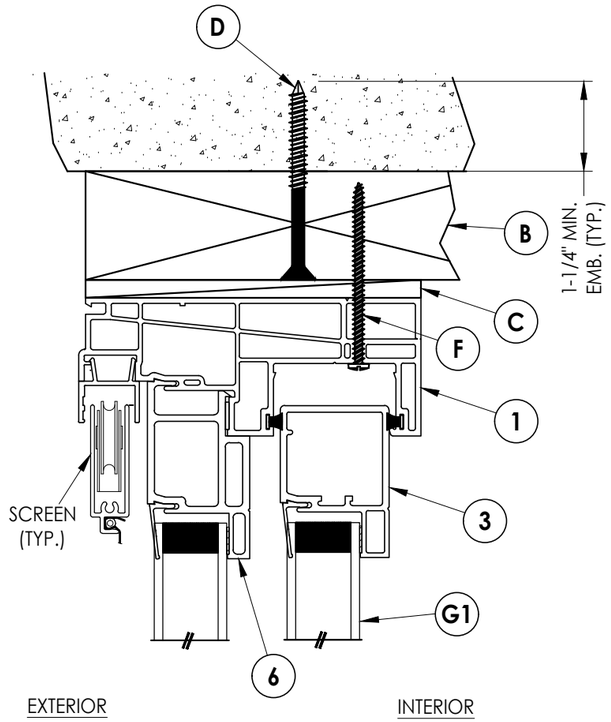

3/3 VERTICAL CROSS SECTION
Shown w/ Steel Stud Framing

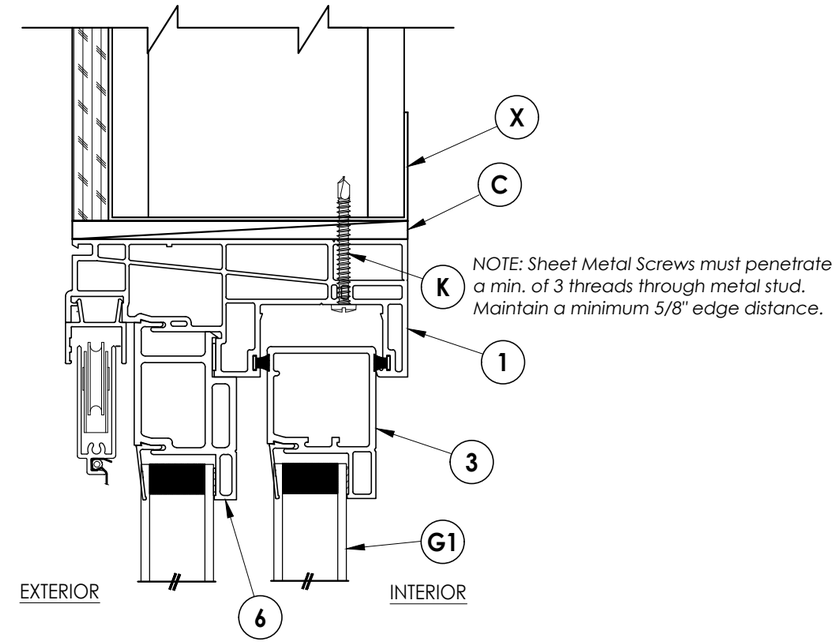

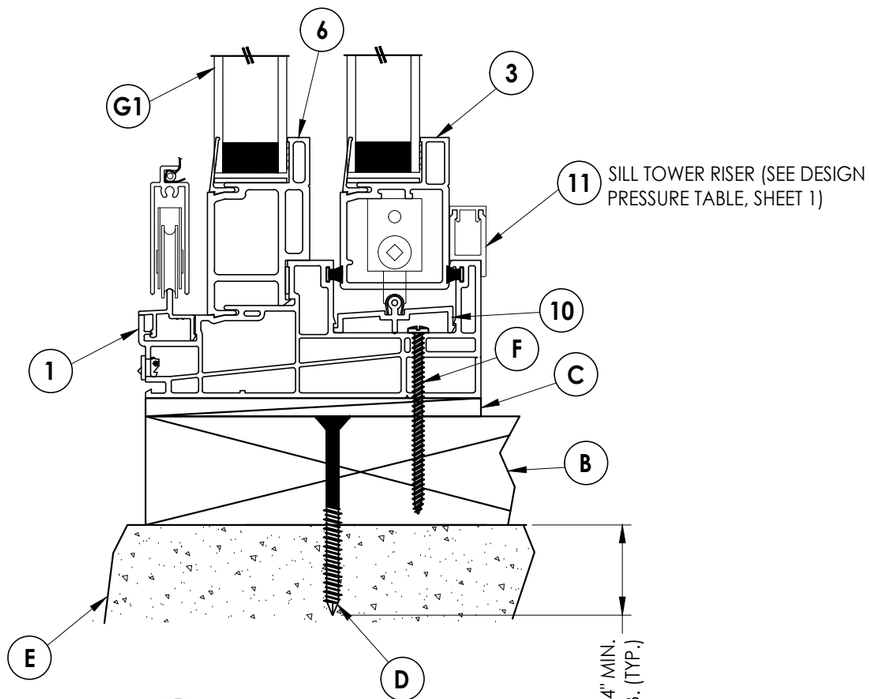

1/3 VERTICAL CROSS SECTION
Shown w/ 2X Buck
Shown w/ Sill Tower Riser

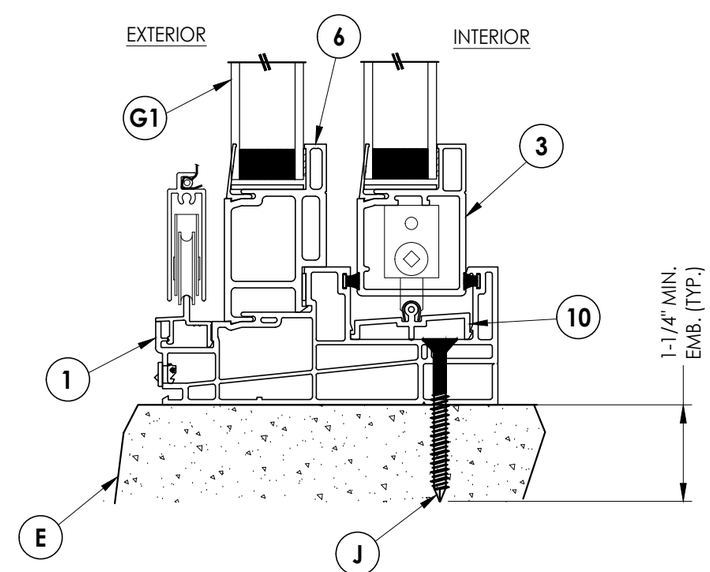

2/3 VERTICAL CROSS SECTION
Shown Direct to Masonry

Documents Prepared By:
Lyndon F. Schmidt
P.E. No. 43409

RW BUILDING CONSULTANTS, INC.
P.O. Box 230, Valrico, FL 33595
Phone No.: 813.659.9197
FBPE Registry No. 9813

PRODUCT: NOVATECH PATIO DOOR

PART OR ASSEMBLY: VERTICAL CROSS SECTIONS

NO.	DATE	REVISIONS	BY
2	9/14/23	UPDATE TO 8TH ED. (2023) FBC	LFS
1	10/01/20	UPDATE TO 7TH ED. (2020) FBC	LFS

DATE: 7/11/18
SCALE: N.T.S.
DWG. BY: JK
CHK. BY: LFS
DRAWING NO.: FL-27628.5
SHEET 3 OF 5

© 2018 R.W. Building Consultants Inc.

Z:\2023 FBC Drawings\Novatech Patio Doors\FL-27628 R3\FL-27628.5.dwg

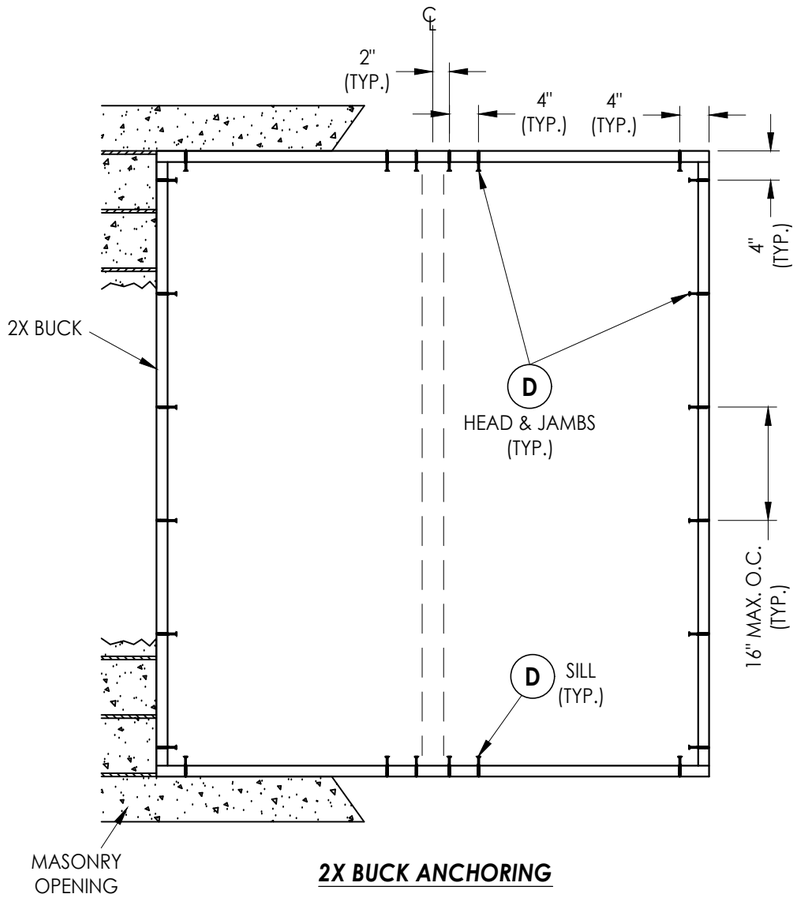

2X BUCK ANCHORING

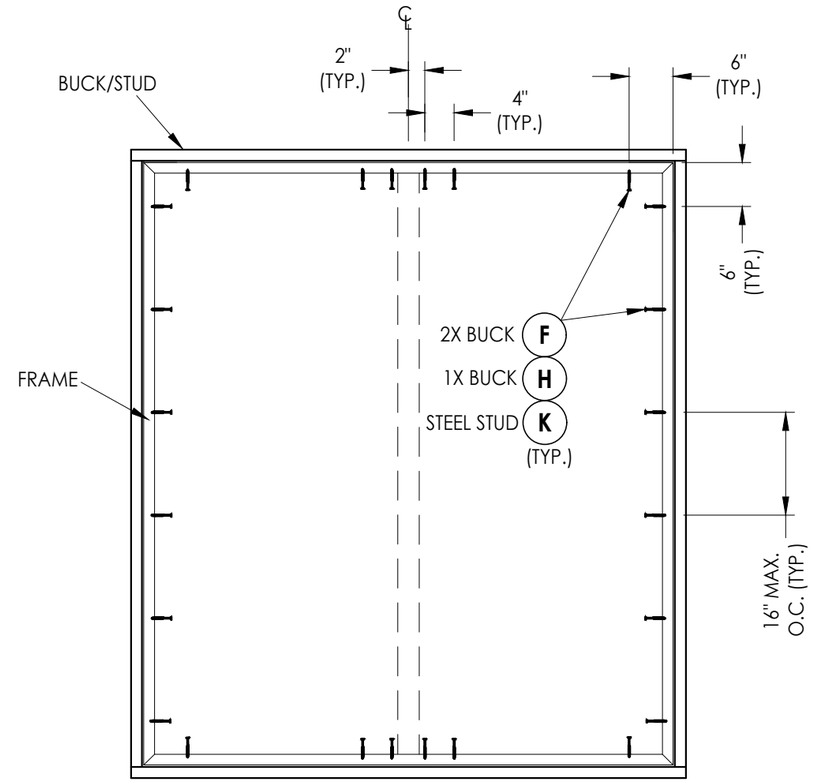

FRAME ANCHORING

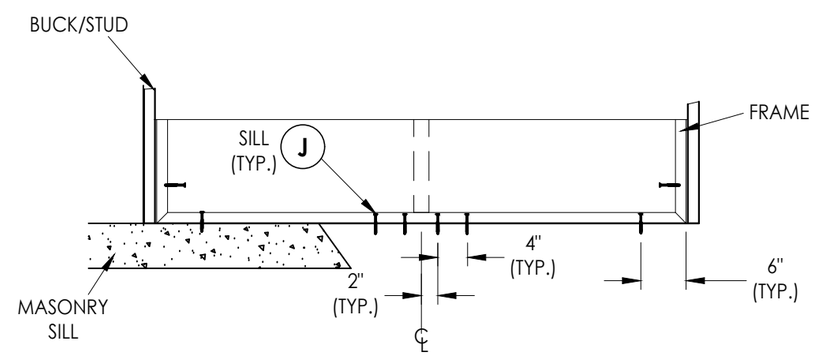

ALTERNATE FRAME ANCHORING
DIRECT TO MASONRY @ SILL

CONCRETE ANCHOR NOTES:

1. *Concrete anchor locations at the corners may be adjusted to maintain the min. edge distance to mortar joints.*
2. *Concrete anchor locations noted as "MAX. ON CENTER" must be adjusted to maintain the min. edge distance to mortar joints, additional concrete anchors may be required to ensure the "MAX. ON CENTER" dimension are not exceeded.*
3. *Concrete anchor table:*

ANCHOR TYPE	ANCHOR SIZE	MIN. EMBEDMENT	MIN. CLEARANCE TO MASONRY EDGE	MIN. CLEARANCE TO ADJACENT ANCHOR
ITW TAPCON®	1/4"	1-1/4"	2"	4"
DeWALT ULTRACON+®	1/4"	1-1/4"	1"	4"

WOOD SCREW INSTALLATION NOTES:

1. *Maintain a minimum 5/8" edge distance, 1" end distance, & 1" o.c. spacing of wood screws to prevent the splitting of wood.*

Documents Prepared By:
Lyndon F. Schmidt
P.E. No. 43409
RW BUILDING CONSULTANTS, INC.
P.O. Box 230, Valrico, FL 33595
Phone No.: 813.659.9197
FBPE Registry No. 9813

PRODUCT: NOVATECH PATIO DOOR

PART OR ASSEMBLY: BUCK & FRAME ANCHORING

NO.	DATE	REVISIONS	BY
2	9/14/23	UPDATE TO 8TH ED. (2023) FBC	LFS
1	10/01/20	UPDATE TO 7TH ED. (2020) FBC	LFS

DATE: 7/11/18
SCALE: N.T.S.
DWG. BY: JK
CHK. BY: LFS
DRAWING NO.: FL-27628.5
SHEET 4 OF 5

© 2018 R.W. Building Consultants Inc.

Z:\2023 FBC Drawings\Novatech Patio Doors\FL-27628 R3\FL-27628.5.dwg

BILL OF MATERIALS

ITEM #	DESCRIPTION	MATERIAL
A	1X BUCK (SG >= 0.42)	WOOD
B	2X BUCK (SG >= 0.42)	WOOD
C	1/4" MAX. SHIM SPACE	-
D	1/4" X 2-3/4" PFH DeWALT OR ITW CONCRETE SCREW	STEEL
E	MASONRY - 3000 PSI MIN. CONCRETE CONFORMING TO ACI 301 OR HOLLOW BLOCK CONFORMING TO ASTM C90	CONCRETE
F	#8 X 2-1/2" PPH SMS (1-1/4" MIN. EMBEDMENT)	STEEL
G	1/4" X 3-1/4" PFH DeWALT OR ITW CONCRETE SCREW	STEEL
J	1/4" X 2-1/4" PFH DeWALT OR ITW CONCRETE SCREW	STEEL
K	#10 PPH SELF-DRILLING SMS	STEEL
X	STEEL STUD Min. Thk .033" (ASTM A653 GRADE 33 Fy=33 ksi min., Fu=45 ksi min.)	STEEL
1	FRAME*	PVC
3	SASH*	PVC
4	MEETING STILE*	PVC
5	XO MULLION*	PVC
6	FIXED RAIL*	PVC
9	GLAZING BEAD*	PVC
10	ROLLER ASSM.	PVC
11	SILL TOWER RISER*	PVC
14	REINFORCEMENT (SASH STILE)	STEEL
15	REINFORCEMENT (MEETING STILE)	STEEL
17	REINFORCEMENT (XO MULLION)	STEEL

* THE APPROVED WHITE RIGID PVC EXTERIOR EXTRUSIONS FOR WINDOWS ARE TO BE PRODUCED BY EXTRUDERS LICENSEES IN "AAMA CERTIFICATIONS PROGRAMS FOR RIGID PVC EXTRUSIONS".

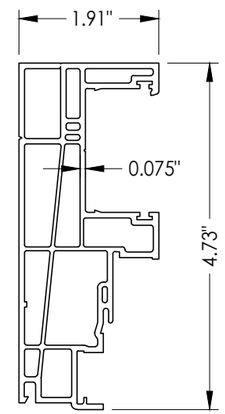

1 FRAME

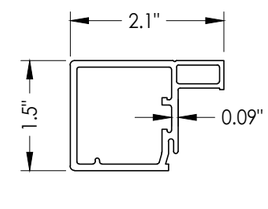

3 SASH

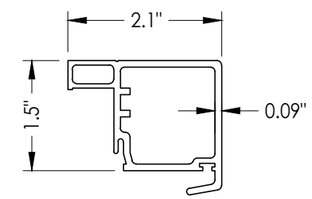

4 MEETING STILE

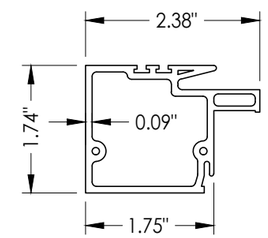

5 XO MULLION

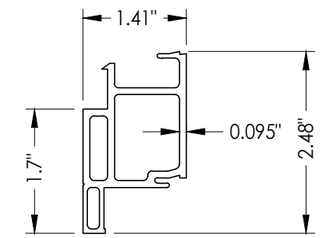

6 FIXED RAIL

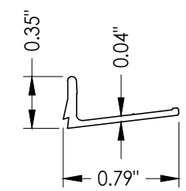

9 GLAZING BEAD

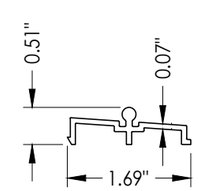

10 ROLLER TRACK

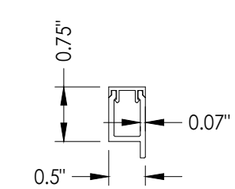

11 SILL TOWER RISER w/ FILLER

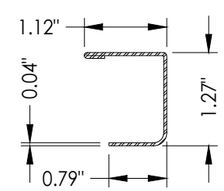

14 REINFORCEMENT SASH STILE

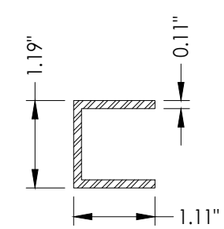

15 REINFORCEMENT MEETING STILE

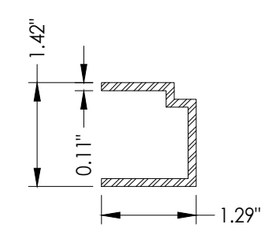

17 REINFORCEMENT XO MULLION

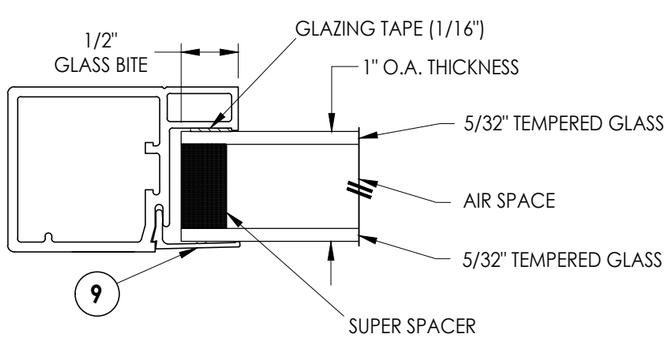

G1 GLAZING DETAIL

Documents Prepared By:
Lyndon F. Schmidt
P.E. No. 43409

RW BUILDING CONSULTANTS, INC.
P.O. Box 230, Valrico, FL 33595
Phone No.: 813.659.9197
FBPE Registry No. 9813

PRODUCT: NOVATECH PATIO DOOR

PART OR ASSEMBLY: BILL OF MATERIALS, GLAZING DETAILS & COMPONENTS

NO.	DATE	REVISIONS	BY
2	9/14/23	UPDATE TO 8TH ED. (2023) FBC	LFS
1	10/01/20	UPDATE TO 7TH ED. (2020) FBC	LFS

DATE: 7/11/18
SCALE: N.T.S.
DWG. BY: JK
CHK. BY: LFS
DRAWING NO.: FL-27628.5
SHEET 5 OF 5

© 2018 R.W. Building Consultants Inc.

Z:\2023 FBC Drawings\Novatech Patio Doors\FL-27628 R3\FL-27628.5.dwg